POWER BUILD®
ISO 9001 & 14001 COMPANY

POWER BUILD BATTERIES PVT. LTD., No.4-M, KIADB Industrial Area, Yedehalli Village, Dabaspet, Bangalore Rural Dist.-562 111. India
UNIT 3 : Plot No. 45, Sy. No. 187-P, KIADB Industrial Area, Phase-2, Niduvanda Village, Bangalore Rural Dist-562 111, India
Telephone : +91-80-2773 5346 / 47, Email : salesadmin@powerbuildbatteries.com, customercare@powerbuildbatteries.com
commercial@powerbuildbatteries.com www.powerbuildbatteries.com CIN NO : U31402KA1992PTC013026

Date:-09-06-2023

POWER BUILD®

12V-TT SERIES @ C10

TECHNICAL SPECIFICATIONS OF 12V-200AH TUBULAR BATTERY

Sl.No	Description	PBB Specification
1	Battery Rating	C10
2	Type of Battery	Flooded Tubular Battery
3	Model Offered	200TT
4	Battery Capacity	200AH
5	Nominal Voltage	12V
6	Dry Battery Weight (± 3 %)	47 Kgs
7	Wet Battery Weight (± 3 %)	70 Kgs
8	Applicable Standards	Product Performance Conforms To IS 13369:2012
9	AH Efficiency	> 90%
10	WH Efficiency	> 75%
11	Self Discharge	<3% Per Month At 27°C (As Per CPRI Test Report)
12	Design Float Life	10 Years Float Life
13	Design Cycle Life	1500 Cycles At 80% DOD 1584 Cycles At 75% DOD 2000 Cycles At 50% DOD 4000 Cycles At 25% DOD
14	Recommended Charging & Charger Settings	Constant Potential
	(a) For Float Application	13.5 To 13.8 Volts - 20 Amps Current Limit per Module
	(b) For Cyclic Application	
15	Boost Charging Parameters	14.4 To 14.8 Volts - 50 Amps Current Limit per Module
16	Trickle Charging Rate	5% Of Rated Capacity
17	Recommended Specific Gravity(Fully Charged)	1.25
18	Recommended Max. Period of Storage	6 Months At 27°C
19	Operating Temperature Range	0°C To 50°C
20	Grid Alloy	Special Lead Alloy is Used For Long Life
21	Container & Lid Material	Polypropylene
22	Sealing Method	Heat Sealing
23	Plate Type	Tubular Positive Plate & Flat Pasted Negative Plate
24	Separator	Poly Ethylene
25	Electrolyte	Dilute H_2SO_4
26	Terminals & ICC	Bolt Type Terminals & Lead Coated Fasteners
27	Mounting	Vertical Mounting
28	Acid Level Indicators	Provided
29	Battery Handles	Provided
30	Battery Dimensions (L x W x H) ± 5mm	502mm x 188mm x 420mm

FRONT VIEW

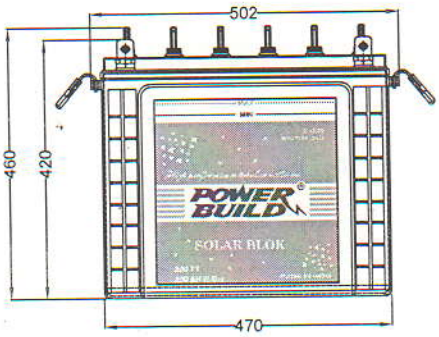

SIDE VIEW

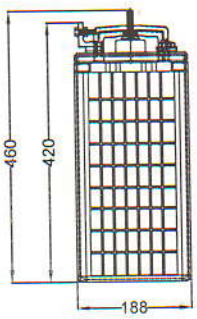

TOP VIEW

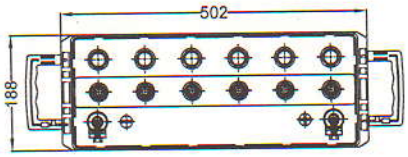

Note:- Technical Parameters are subject to change due to continuous improvements and R & D

TATA POWER SOLAR SYSTEMS LTD.
Rooftop Engineering
Approval Status on: 2/22/2024
✓ Approved
Approved with comments, to be Resubmitt
Approved By: Pranjali Bora

Prepared by

K. Jyothi
Checked by

Approved By